JYEBAO www.jyebao.com.tw

AT-T8T3T8	TNC Jack To TNC Plug To TNC Jack 50Ω

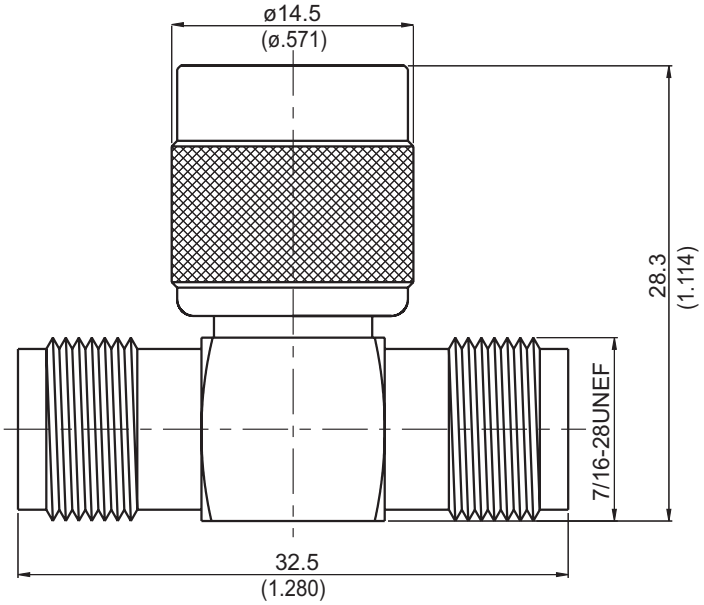

Parts	Material	Plating (Micro-inch)
Lock Washer	Brass	Tin-Zinc-Copper-Alloy 100 Over Copper 50
Body	Brass	Tin-Zinc-Copper-Alloy 100 Over Copper 50
Contact Pin(Jack)	Phosphor Bronze	Gold 10 Over Nickel 50 Over Copper 50
Center Pin(Plug)	Brass	Gold 10 Over Nickel 50 Over Copper 50
Gasket	Silicon	
Spring	Delrin	
Washer	Brass	Tin-Zinc-Copper-Alloy 100 Over Copper 50
Insulator	Teflon	
Contact Body	Brass	Tin-Zinc-Copper-Alloy 100 Over Copper 50
Coupling Nut	Brass	Tin-Zinc-Copper-Alloy 100 Over Copper 50

Weight: 23.94 g

Notice: JYEBAO reserves the right to make modifications deemed appropriate.

JYEBAO www.jyebao.com.tw

AT-T8T3T8-75	TNC Jack To TNC Plug To TNC Jack 75Ω

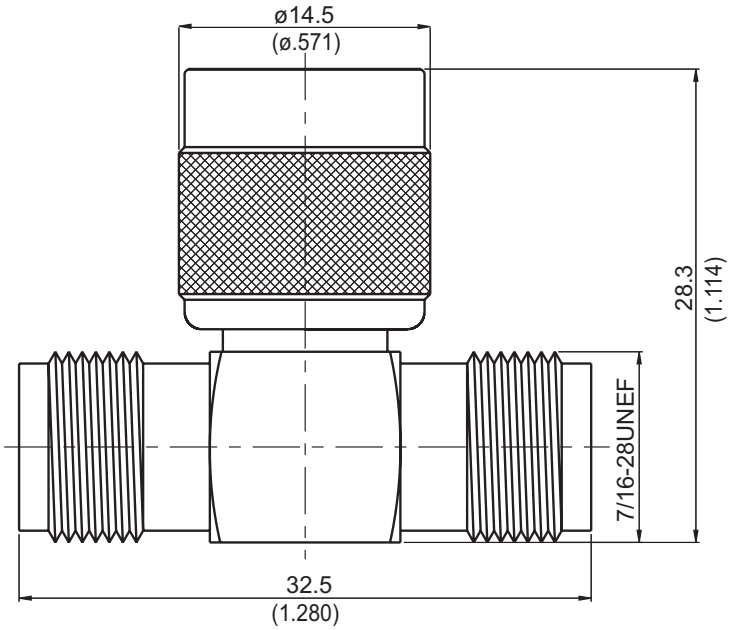

Parts	Material	Plating (Micro-inch)
Lock Washer	Brass	Tin-Zinc-Copper-Alloy 100 Over Copper 50
Body	Brass	Tin-Zinc-Copper-Alloy 100 Over Copper 50
Contact Pin(Jack)	Phosphor Bronze	Gold 10 Over Nickel 50 Over Copper 50
Center Pin(Plug)	Brass	Gold 10 Over Nickel 50 Over Copper 50
Gasket	Silicon	
Spring	Delrin	
Washer	Brass	Tin-Zinc-Copper-Alloy 100 Over Copper 50
Insulator	Teflon	
Contact Body	Brass	Tin-Zinc-Copper-Alloy 100 Over Copper 50
Coupling Nut	Brass	Tin-Zinc-Copper-Alloy 100 Over Copper 50

Weight:

Notice: JYEBAO reserves the right to make modifications deemed appropriate.