JYEBAO www.jyebao.com.tw

AT-T8T8T8	TNC Jack To TNC Jack To TNC Jack

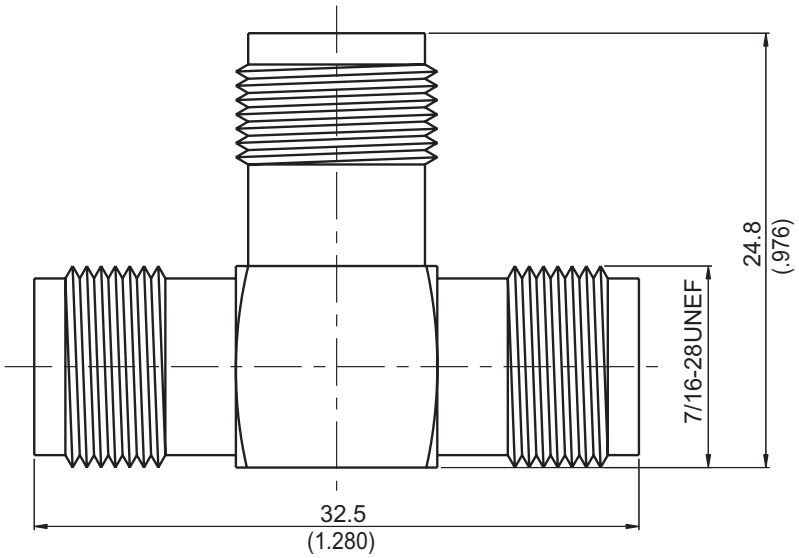

Parts	Material	Plating (Micro-inch)
Lock Washer	Brass	Tin-Zinc-Copper-Alloy 100 Over Copper 50
Body	Brass	Tin-Zinc-Copper-Alloy 100 Over Copper 50
Contact Pin	Phosphor Bronze	Gold 10 Over Nickel 50 Over Copper 50
Contact Pin	Phosphor Bronze	Gold 10 Over Nickel 50 Over Copper 50
Insulator	Teflon	
Contact Body	Brass	Tin-Zinc-Copper-Alloy 100 Over Copper 50

Weight:

Notice: JYEBAO reserves the right to make modifications deemed appropriate.

JYEBAO www.jyebao.com.tw

AT-T8T8T8-75	TNC JACK TO TNC JACK TO TNC JACK 75Ω

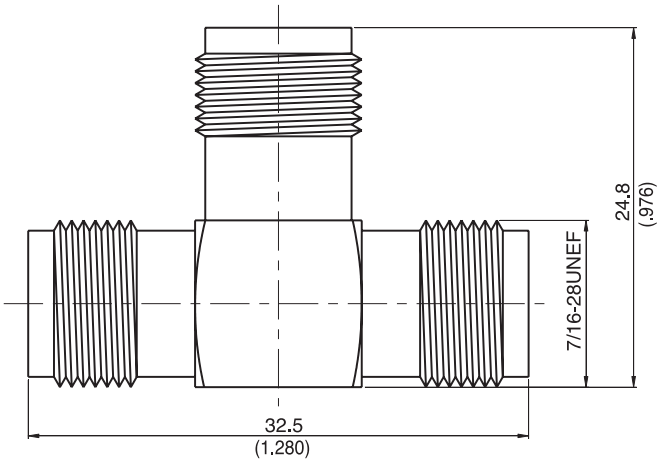

Parts	Material	Plating (Micro-inch)
Lock Washer	Brass	Tin-Zinc-Copper-Alloy 100 Over Copper 50
Contact Pin	Phosphor Bronze	Gold 10 Over Nickel 50 Over Copper 50
Insulator	Teflon	
Contact Body	Brass	Tin-Zinc-Copper-Alloy 100 Over Copper 50
Body	Brass	Tin-Zinc-Copper-Alloy 100 Over Copper 50

Weight: 16.28 g

This part number complies with RoHS.
Notice: JYEBAO reserves the right to make modifications deemed appropriate.