JYEBAO www.jyebao.com.tw

AT-B8B3B8	BNC Jack To BNC Plug To BNC Jack 50Ω

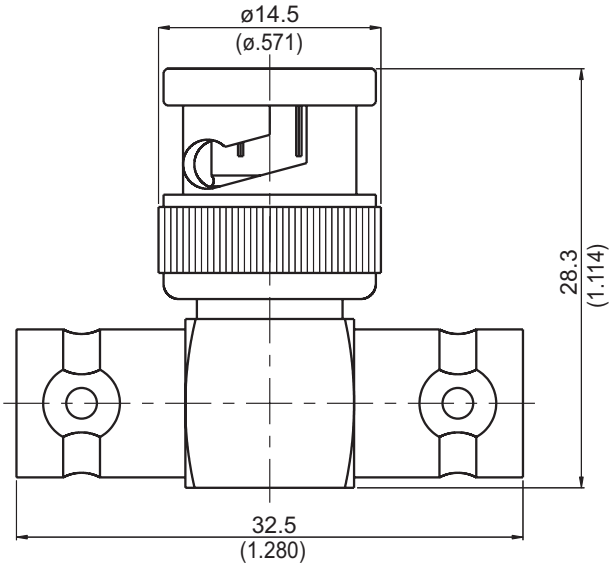

Parts	Material	Plating (Micro-inch)
Lock Washer	Brass	Tin-Zinc-Copper-Alloy 100 Over Copper 50
Center Pin(Plug)	Brass	Gold 10 Over Nickel 50 Over Copper 50
Contact Pin(Jack)	Phosphor Bronze	Gold 10 Over Nickel 50 Over Copper 50
Gasket	Silicone	
Spring	SK 5	Tin-Zinc-Copper-Alloy 100 Over Copper 50
Washer	Brass	Tin-Zinc-Copper-Alloy 100 Over Copper 50
Insulator	Teflon	
Contact Body	Brass	Tin-Zinc-Copper-Alloy 100 Over Copper 50
Body	Brass	Tin-Zinc-Copper-Alloy 100 Over Copper 50
Coupling Nut	Brass	Tin-Zinc-Copper-Alloy 100 Over Copper 50

Weight: 21.24 g

Notice: JYEBAO reserves the right to make modifications deemed appropriate.

JYEBAO www.jyebao.com.tw

AT-B8B3B8-75	BNC Jack To BNC Plug To BNC Jack 75Ω

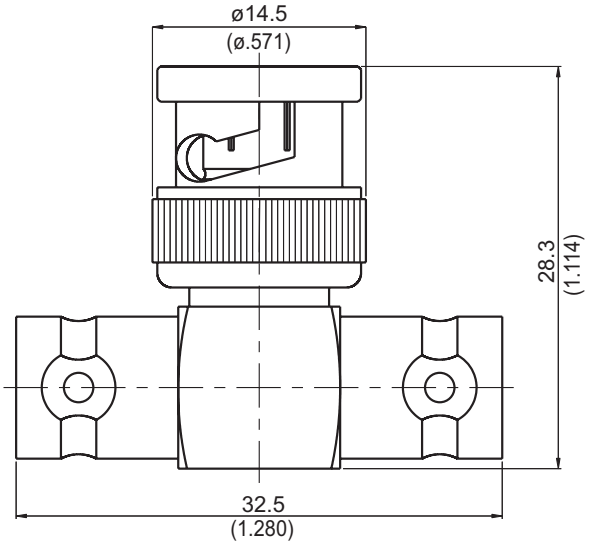

Parts	Material	Plating (Micro-inch)
Lock Washer	Brass	Tin-Zinc-Copper-Alloy 100 Over Copper 50
Body	Brass	Tin-Zinc-Copper-Alloy 100 Over Copper 50
Center Pin(Plug)	Brass	Gold 10 Over Nickel 50 Over Copper 50
Contact Pin(Jack)	Phosphor Bronze	Gold 10 Over Nickel 50 Over Copper 50
Gasket	Silicone	
Spring	SK 5	Tin-Zinc-Copper-Alloy 100 Over Copper 50
Washer	Brass	Tin-Zinc-Copper-Alloy 100 Over Copper 50
Insulator	Teflon	
Contact Body	Brass	Tin-Zinc-Copper-Alloy 100 Over Copper 50
Coupling Nut	Brass	Tin-Zinc-Copper-Alloy 100 Over Copper 50

Weight: 19.55 g

Notice: JYEBAO reserves the right to make modifications deemed appropriate.