JYEBAO www.jyebao.com.tw

AT-B8B8B8	BNC Jack To BNC Jack To BNC Jack 50Ω

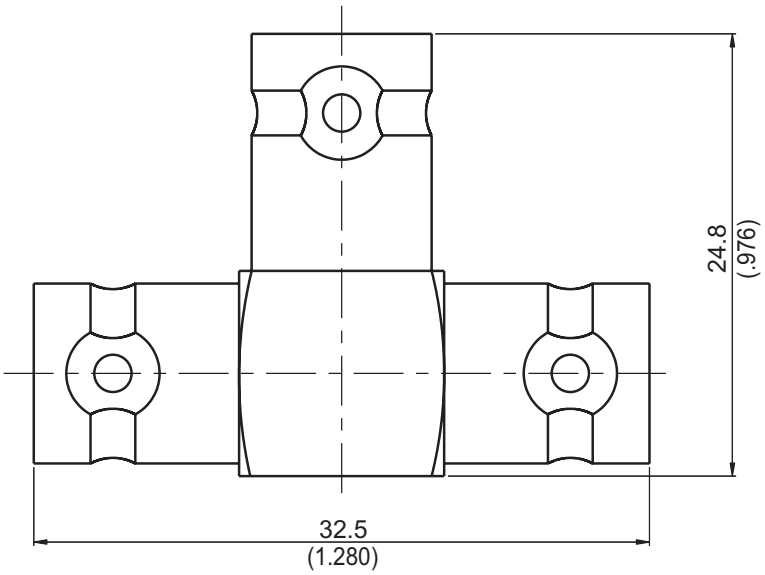

Parts	Material	Plating (Micro-inch)
Lock Washer	Brass	Tin-Zinc-Copper-Alloy 100 Over Copper 50
Contact Pin	Phosphor Bronze	Gold 10 Over Nickel 50 Over Copper 50
Contact Pin	Beryllium Copper	Gold 10 Over Nickel 50 Over Copper 50
Insulator	Teflon	
Contact Body	Brass	Tin-Zinc-Copper-Alloy 100 Over Copper 50
Body	Brass	Tin-Zinc-Copper-Alloy 100 Over Copper 50

Weight: 14.89 g

Notice: JYEBAO reserves the right to make modifications deemed appropriate.

JYEBAO www.jyebao.com.tw

AT-B8B8B8-75	**BNC Jack To BNC Jack To BNC Jack** **75Ω**

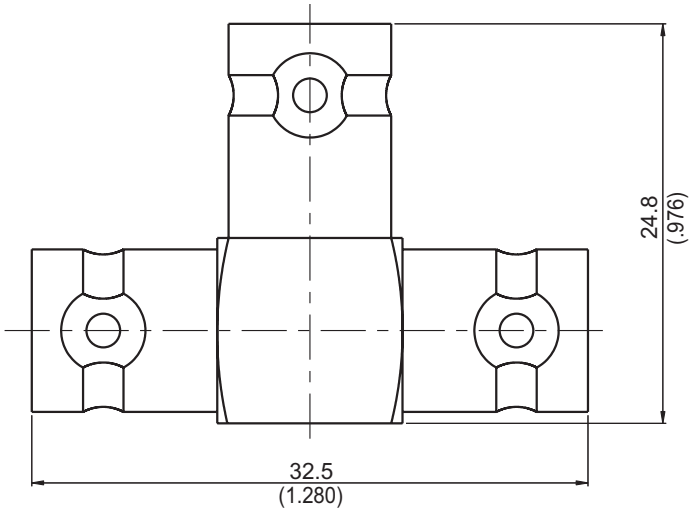

Parts	Material	Plating (Micro-inch)
Lock Washer	Brass	Tin-Zinc-Copper-Alloy 100 Over Copper 50
Contact Pin	Phosphor Bronze	Gold 10 Over Nickel 50 Over Copper 50
Contact Pin	Beryllium Copper	Gold 10 Over Nickel 50 Over Copper 50
Insulator	Teflon	
Contact Body	Brass	Tin-Zinc-Copper-Alloy 100 Over Copper 50
Body	Brass	Tin-Zinc-Copper-Alloy 100 Over Copper 50

Weight: 14.3 g

Notice: JYEBAO reserves the right to make modifications deemed appropriate.