JYEBAO www.jyebao.com.tw

AT-S8S8S8	SMB Jack To SMB Jack To SMB Jack 50Ω

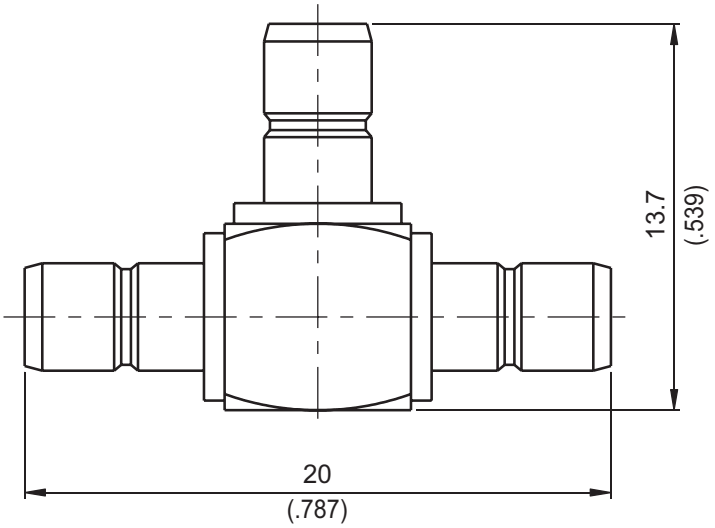

Parts	Material	Plating (Micro-inch)
Cover	Brass	Gold 5 Over Nickel 50 Over Copeer 50
Contact Pin	Brass	Gold 10 Over Nickel 50 Over Copper 50
Contact Pin	Brass	Gold 10 Over Nickel 50 Over Copper 50
Insulator	Teflon	
Body	Brass	Gold 5 Over Nickel 50 Over Copeer 50

Weight: 3.78 g

This part number complies with RoHS.
Notice: JYEBAO reserves the right to make modifications deemed appropriate.