JYEBAO www.jyebao.com.tw

AT-N3N3N3	N PLUG TO N PLUG TO N PLUG 50Ω

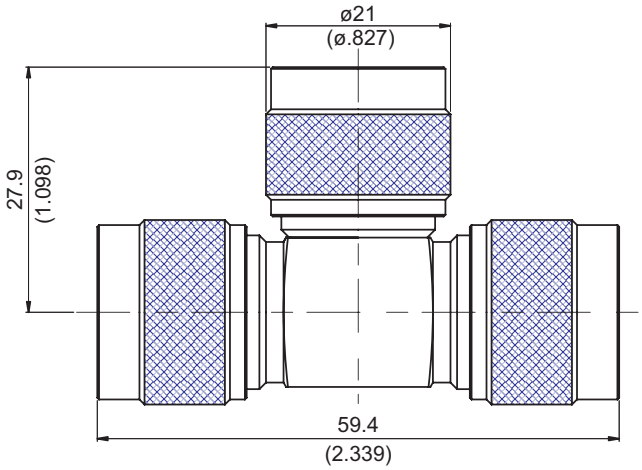

Parts	Material	Plating (Micro-inch)
Renber Ring	Brass	Tin-Zinc-Copper-Alloy 100 Over Copper 50
Gasket	Silicon	
Insulator	Teflon	
Contact Body	Brass	Tin-Zinc-Copper-Alloy 100 Over Copper 50
Body	Brass	Tin-Zinc-Copper-Alloy 100 Over Copper 50
Contact Pin	Brass	Gold 10 Over Nickel 50 Over Copper 50
Coupling Nut	Brass	Tin-Zinc-Copper-Alloy 100 Over Copper 50

Weight: 124.44 g

This part number complies with RoHS.
Notice: JYEBAO reserves the right to make modifications deemed appropriate.