JYEBAO www.jyebao.com.tw

AT-MC3MC8MC3	SMC PLUG TO SMC JACK TO SMC PLUG 50Ω

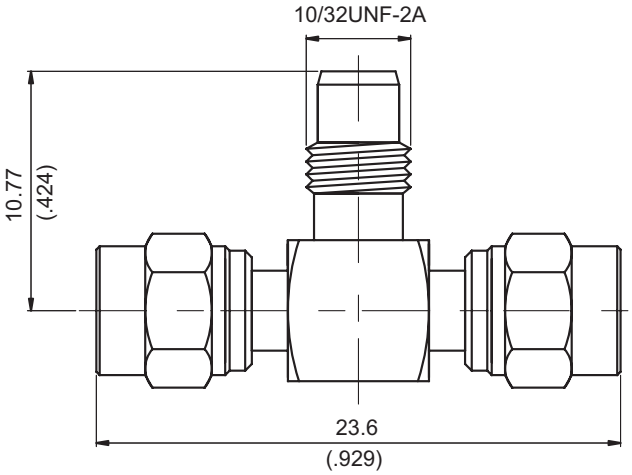

Parts	Material	Plating (Micro-inch)
Cover	Brass	Gold 5 Over Nickel 50 Over Copper 50
Contact Pin(Jack)	Brass	Gold 10 Over Nickel 50 Over Copper 50
Contact Pin(Plug)	Beryllium Copper	Gold 10 Over Nickel 50 Over Copper 50
Insulator	Teflon	
Body	Brass	Gold 5 Over Nickel 50 Over Copper 50
Coupling Nut	Brass	Gold 5 Over Nickel 50 Over Copper 50

Weight: 3.93 g

This part number complies with RoHS.
Notice: JYEBAO reserves the right to make modifications deemed appropriate.