JYEBAO www.jyebao.com.tw

AT-B3B3B3	**BNC PLUG TO BNC PLUG TO BNC PLUG 50Ω**

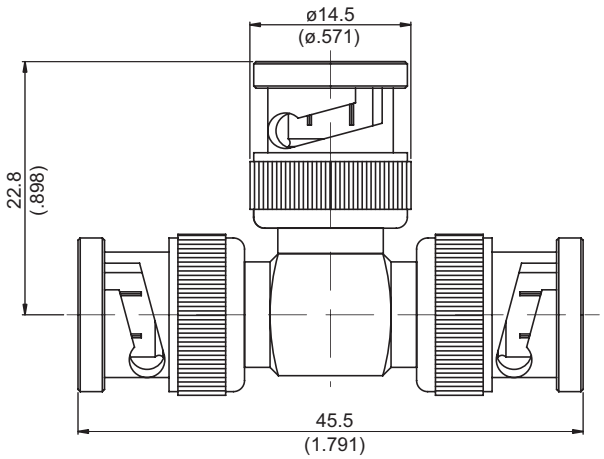

Parts	Material	Plating (Micro-inch)
Body	Brass	Tin-Zinc-Copper-Alloy 100 Over Copper 50
Contact Pin	Brass	Gold 10 Over Nickel 50 Over Copper 50
Insulator	Teflon	
Gasket	Silicon	
Washer	Brass	Tin-Zinc-Copper-Alloy 100 Over Copper 50
Spring	SK5	Tin-Zinc-Copper-Alloy 100 Over Copper 50
Contact Body	Brass	Tin-Zinc-Copper-Alloy 100 Over Copper 50
Coupling Nut	Brass	Tin-Zinc-Copper-Alloy 100 Over Copper 50

Weight: 35.06 g

This part number complies with RoHS.
Notice: JYEBAO reserves the right to make modifications deemed appropriate.