JYEBAO www.jyebao.com.tw

AT-A8A8A8	**SMA Jack To SMA Jack To SMA Jack 50Ω**

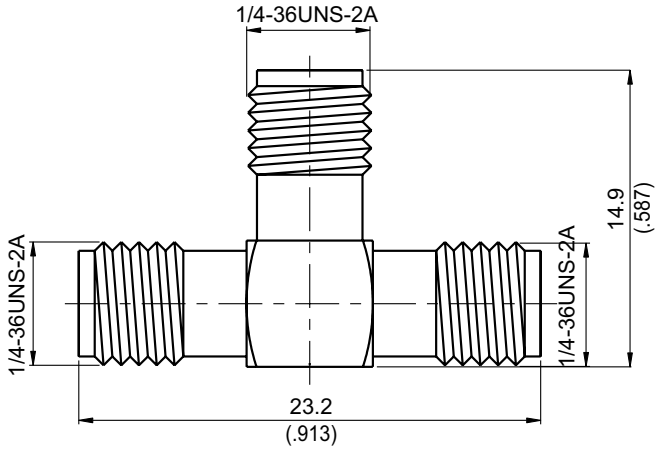

Parts	Material	Plating (Micro-inch)
Cover	Brass	Gold 5 Over Nickel 50 Over Copper 50
Contact Pin	Beryllium Copper	Gold 10 Over Nickel 50 Over Copper 50
Insulator	Teflon	
Body	Brass	Gold 5 Over Nickel 50 Over Copper 50

Weight: 3.92 g

This part number complies with RoHS.
Notice: JYEBAO reserves the right to make modifications deemed appropriate.