JYEBAO www.jyebao.com.tw

AT-A8A3A8	**SMA Jack To SMA Plug To SMA Jack 50Ω**

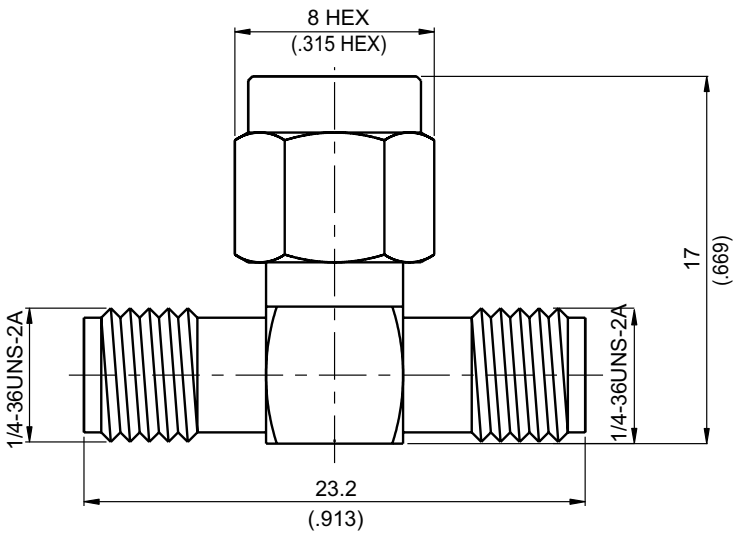

Parts	Material	Plating (Micro-inch)
Cover	Brass	Gold 5 Over Nickel 50 Over Copper 50
Renbrock Ring	Beryllium Copper	Tin-Zinc-Copper-Alloy 100 Over Copper 50
Gasket	Silicon	
Contact Pin(Jack)	Beryllium Copper	Gold 10 Over Nickel 50 Over Copper 50
Contact Pin(Plug)	Brass	Gold 10 Over Nickel 50 Over Copper 50
Insulator	Teflon	
Body	Brass	Gold 5 Over Nickel 50 Over Copper 50
Coupling Nut	Brass	Gold 5 Over Nickel 50 Over Copper 50

Weight: 5.38 g

This part number complies with RoHS.
Notice: JYEBAO reserves the right to make modifications deemed appropriate.